Configuration					
Dash #	Assembly	Nameplate	Cert	Model	Output
-1	9017383	9017663	TSO	TI1200	115 VAC, 60 Hz
-2	9018214	9018215	Non-TSO	TI1200	115 VAC, 60 Hz
-3	9018277	9017663-1	TSO	TI1202	230 VAC, 50 Hz
-4	9017383-1	9017663	TSO	TI1200	115 VAC, 60 Hz
-5	9018277-1	9017663-1	TSO	TI1202	230 VAC, 50 Hz
-6	9017383-2	9017663-2	TSO	TI1204	115 VAC, 400 Hz
-7	9017383-3	9017663-2	TSO	TI1204	115 VAC, 400 Hz
-8	9018277	9017663-3	TSO	TI1202	240 VAC, 50 Hz

Revision				
ECO	Rev.	Description	Date	Approved
		See obsolete drawings for revision history.		
7071	N	Added -7 configuration and updated pinout for -7.	06/03/19	VAA/MKN
7095	P	Added center of gravity and keyway note. Changed -7 Nameplate to 9017663-2.	08/08/19	VAA/BAW
7453	Q	Added -8 configuration.	02/21/22	VAA/MKN

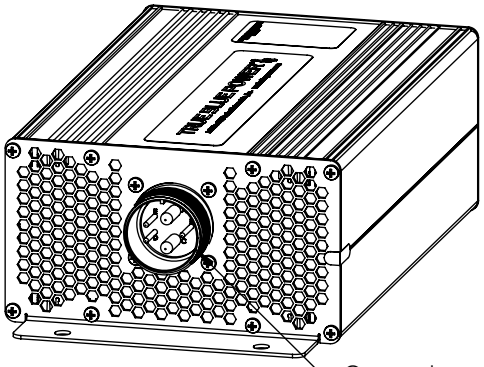

-1 config shown

Connector per MS3102A24-12P

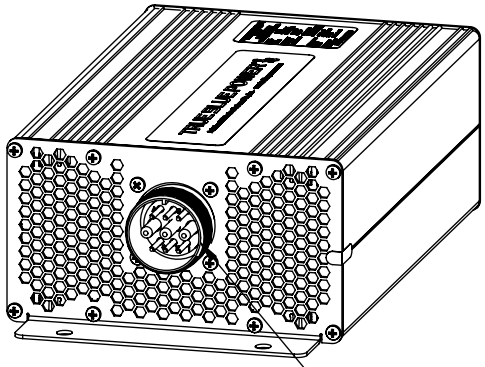

-7 config shown

Connector per MS3102A24-11P

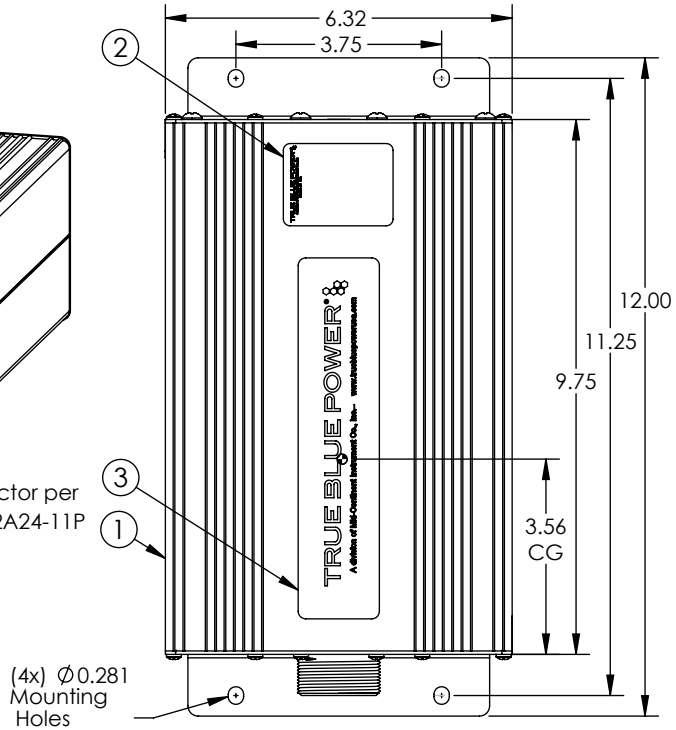

Connector Pinout		
	-1 thru -6, -8 Config	-7 Config
A	24-32VDC Input	Reserved
B	VAC Output	115VAC Output
C	Input Return	Output Return
D	Output Return	24-32VDC Input
E	Remote On/Off	Remote On/Off
F	N/A	Input Return
G	N/A	Reserved
H	N/A	Reserved
I	N/A	Reserved

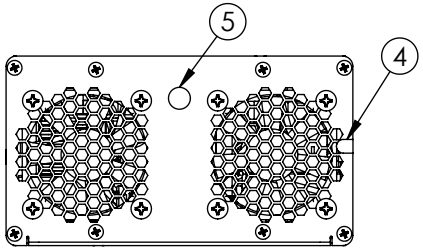

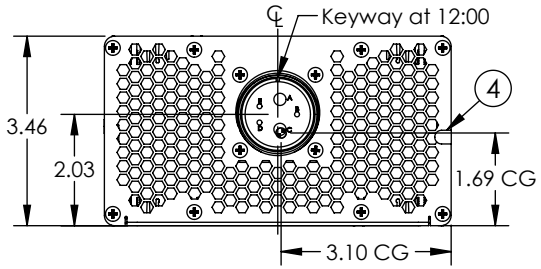

Specifications	
Model Number	See config table
Power Input	20-36 VDC Max, 60 Amps Max @ 28VDC
Power Output	1200 VA, See configuration table for AC voltage
Power Factor	-0.8 to +0.8
Features	88% Efficiency, Remote ON/OFF, Single Phase Sine Wave, Harmonic Distortion under 2.8%
Protection	Overtemp, Short Circuit, Undervoltage, Overvoltage
Overload	150% for 5 minutes
Weight	7.3 lbs
Qualification	FAA TSO-C73, EASA ETSO C73 RTCA DO-160G Env. Cat. See installation manual
Temperature	-55°C to +70°C
Altitude	55,000 feet MAX
Mating Connector	TBP p/n's 9017235-1/-2 (for -1 thru -6 only)
Case	Anodized Aluminum, Blue
Install Manual	TBP p/n 9017680

Item	Qty	Part Number	Description
1	1	See config	Assy, Inverter
2	1	See config	Nameplate, TI1200
3	1	9017130	Label, True Blue Power
4	2	6018956-1	Decal, Warranty
5	1	8017212	Decal, Hole Cover

UNLESS OTHERWISE SPECIFIED, ALL DIMENSIONS ARE IN INCHES.
TOLERANCE:
FRACTIONAL= ±1/64
.XX= ±0.015
.XXX= ±0.005
.XXXX= ±0.002
ANGULAR= ±0.5°
WEIGHT: N.T.E.+5%
BREAK ALL SHARP EDGES
THREADS PER MIL-S-7742

DRAWN: JDS 08/11/2011

APPROVED: MKN 05/30/2012

This document discloses proprietary information of Mid-Continent Instrument Co., Inc. It may be reproduced or disclosed only with written permission of Mid-Continent Instrument Co., Inc. and is not to be used in any way detrimental to the interests of Mid-Continent Instrument Co., Inc.

TRUE BLUE POWER®
A division of Mid-Continent Instrument Co., Inc.

TITLE: Inverter, 1200VA, DC to AC

PART NUMBER: 6431200

SCALE: 1:3.5 | DO NOT SCALE THIS DRAWING | SHEET: 1 of 1